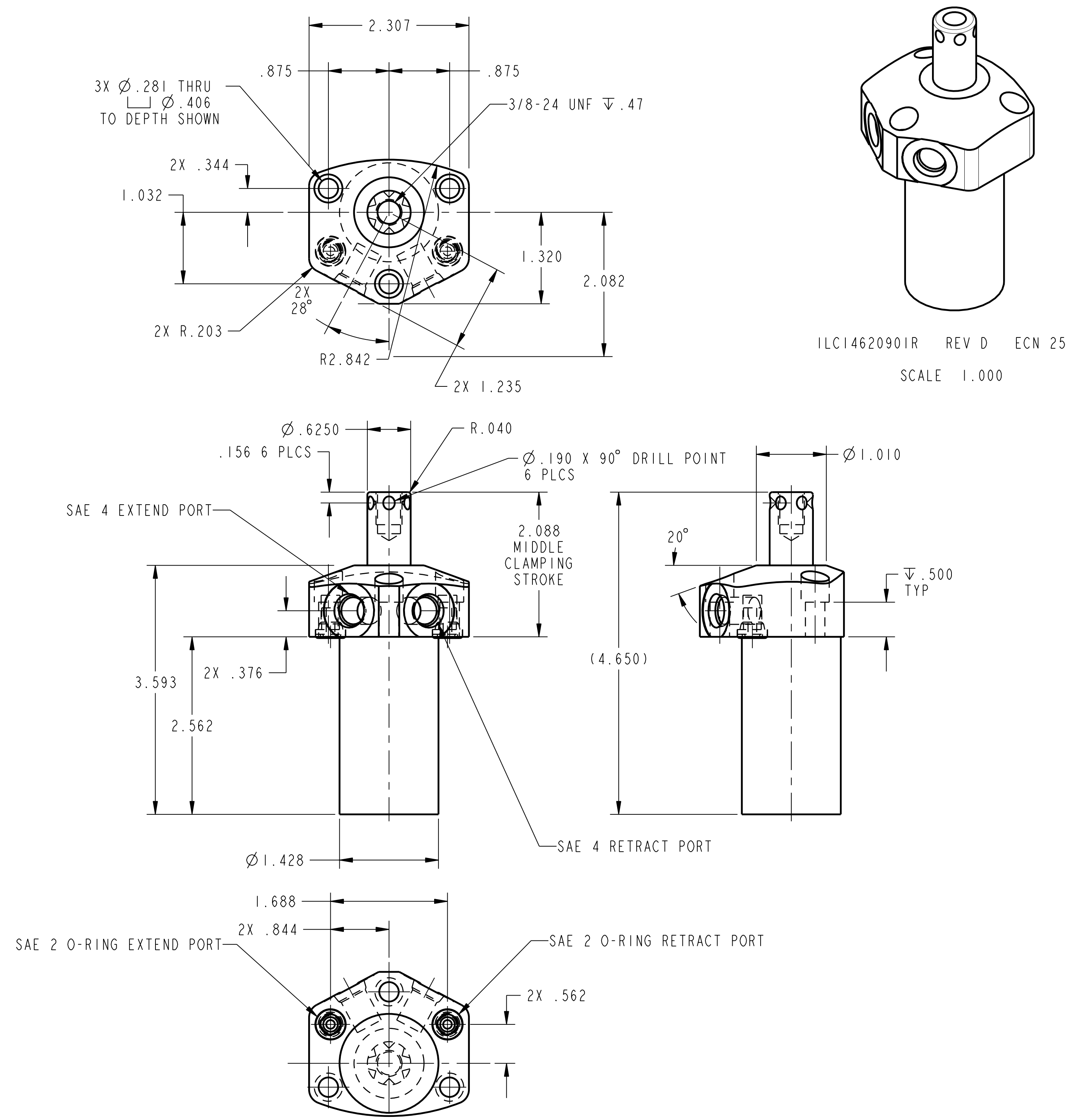

CAD CONTROL DRAWING

VEKTEK®
VEKTEK, INC.
1334 E. SIXTH AVE. P.O. BOX 625
EMPORIA, KS. 66801 U.S.A.

REV	IN ACCORDANCE WITH ECN	EFFECTIVE DATE	REVISED BY	DATE	REFERENCE MODEL	REF REV
D	2510	RELEASE	JDW	04/04/13	1462090IR	C

SC, TF, DA, HS, RH, 1100
```

DRW BY: K. ROEMER
DATE: 02-12-02

DRAWING STATUS: **Released**
PRODUCTION APPROVED FOR RELEASED STATUS ONLY

TOLERANCES DO NOT APPLY
DIMENSIONS ARE NOMINAL

SIZE D | ILC1462090IR | REV D

SHEET 1 OF 1

FORM FEG036, Rev. A

@Copyright 1986-2024 by Vektek LLC******* *****
*****
************
```