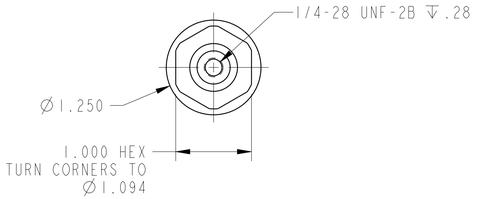

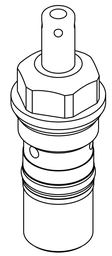

ILC15120502R REV A ECN 4609

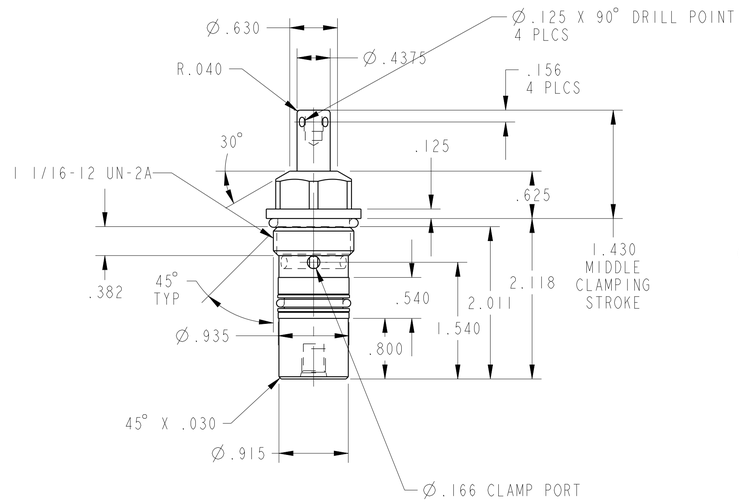

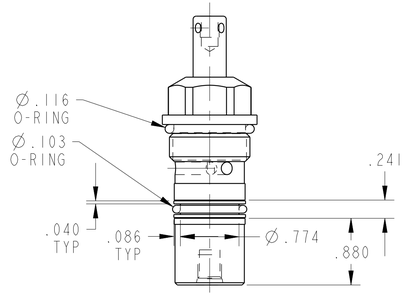

CAD CONTROL DRAWING

VEKTEK®
VEKTEK, INC.
1334 E. SIXTH AVE. P.O. BOX 625
EMPORIA, KS. 66801 U.S.A.

REV	IN ACCORDANCE WITH ECN	EFFECTIVE DATE	REVISED BY	DATE	REFERENCE MODEL	REF REV
A	4609	RELEASED	RLK	1/21/22	15120502R	A

SC, CM, 450, DA, RH

DRW BY: RLK
DATE: 1/21/22

DRAWING STATUS: Released
PRODUCTION APPROVED FOR RELEASED STATUS ONLY

TOLERANCES DO NOT APPLY
DIMENSIONS ARE NOMINAL

SIZE D | ILC15120502R | REV A

SHEET 1 OF 1

@Copyright 1986-2024 by Vektek LLC******* ***** *****

FORM FEG036, Rev. B