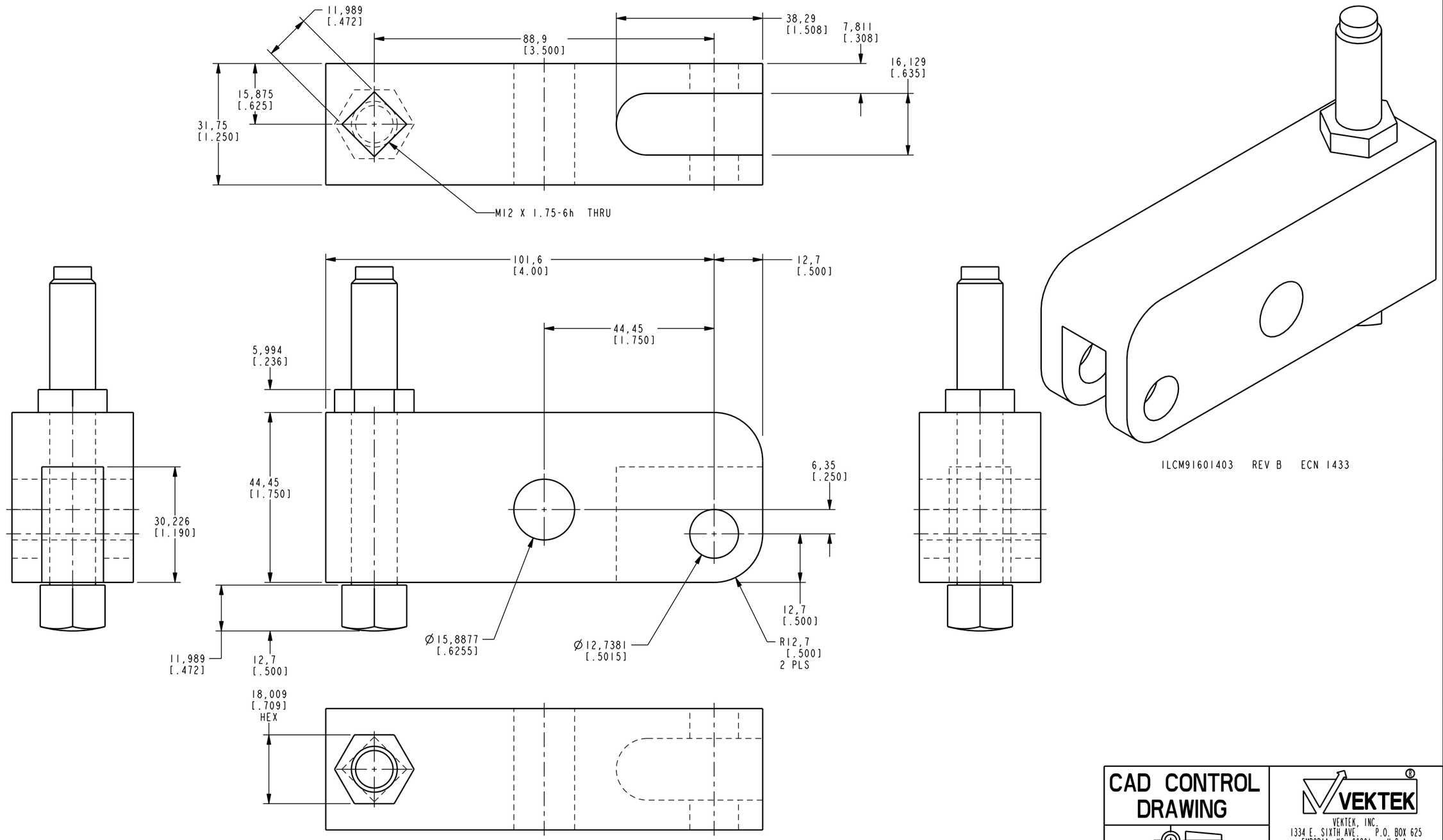

CAD CONTROL DRAWING

VEKTEK

VEKTEK, INC.
1334 E. SIXTH AVE. P.O. BOX 625
EMPORIA, KS. 66801 U.S.A.

B	1433	RELEASE	K. ROEMER	02-15-06	91601403	A	LEVER, LC, 22 KN
REV	IN ACCORDANCE WITH ECN	EFFECTIVE DATE	REVISED BY	DATE	REFERENCE MODEL	REF REV	`` `` ``
DRW BY: K. ROEMER	DRAWING STATUS: **Released**				TOLERENCES DO NOT APPLY	UNITS	SIZE
DATE: 10-17-05	PRODUCTION APPROVED FOR RELEASED STATUS ONLY				DIMENSIONS ARE NOMINAL	mm [inch]	B

ILCM91601403 REV B

SHEET 1 OF 1

FORM FEG036, Rev. A

@Copyright 1986-2024 by Vektek LLC******* ***** ***********
*****