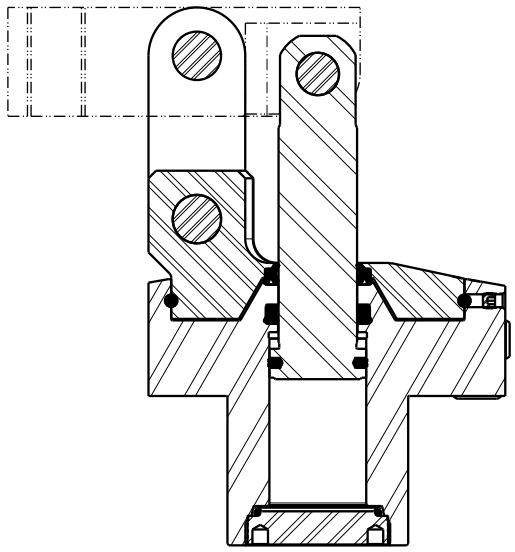

NO	QTY	PART NO	DESCRIPTION	STD SEAL KIT
1	2	21500331	SCREW, SET, CUP PT, M10 X 1.5 X 16	
2	4	23050024	RING, RTNG, EXT, 0.625	X
3	2	23050048	RING, RTNG, EXT, 0.551	X
4	2	30601122	PLUG, SOCH, SAE 2	
5	2	30601144	PLUG, SOCH, SAE 4	
6	2	39000050	O-RING, (-204)	X
7	1	39051153	O-RING, (38mm X 2)	X
8	1	39052063	SEAL, ROD, RSD, 26, 85A, AU	X
9	1	39053044	SEAL, WIPER, SNAP IN, WED, 26, 94A, AU	X
10	1	39056012	SEAL, CAP, PISTON, 32, 94A, AU	X
11	2	81600171	LINK, LC, TL360, 5000/22.3kN	
12	2	81600172	PIN, LINK, LC, TL360, 5000/22.3kN	
13	1	81600173	PIN, PLUNGER, LC, TL360, 5000/22.3kN	
14	1	81600255	PLUNGER, LC, TL360, DA, 5000/22.3kN	
15	1	81600275	CAP, LC, TL360, 5000/22.3kN	
N/A	N/A	60160205	KIT, SEAL, ASSY, LC, TL360, DA, 5000lb	NOTED

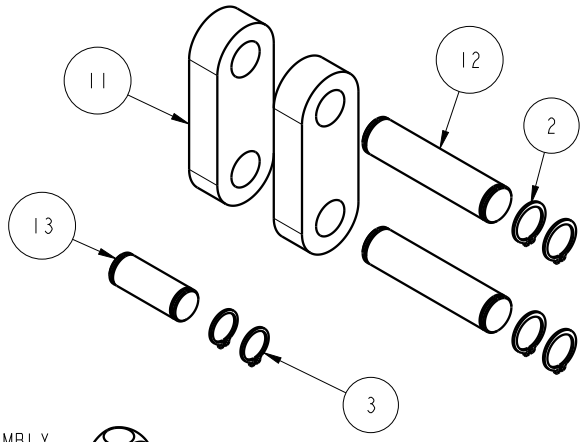

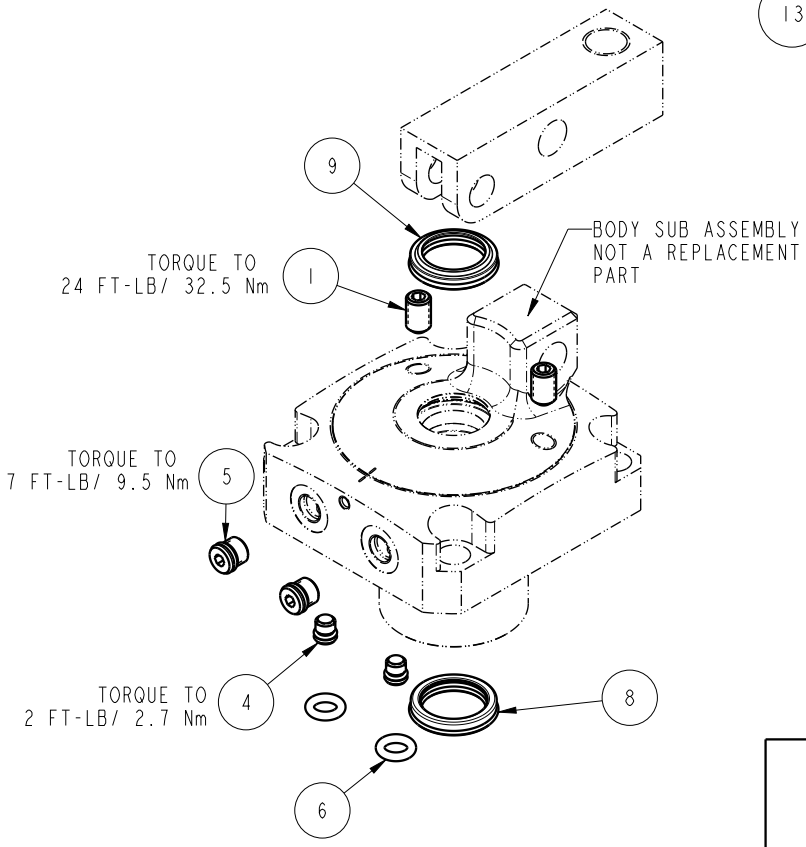

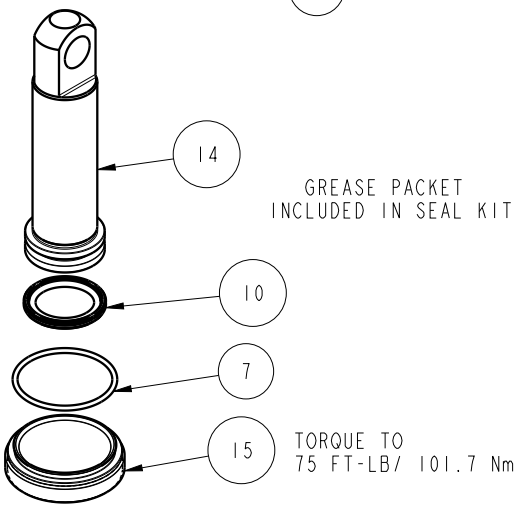

PARTS LIST

VEKTEK®

VEKTEK, INC.
1334 E. SIXTH AVE. P.O. BOX 625
EMPORIA, KS. 66801 U.S.A.

B	5057	RELEASE	ALS	3/16/23
REV	IN ACCORDANCE WITH ECN	EFFECTIVE DATE	REVISED BY	DATE

DRW BY: BCD
DATE: 07-15-16

DRAWING STATUS: Released
PRODUCTION APPROVED FOR RELEASED STATUS ONLY

ASSEMBLIES AFFECTED
16-3232-00

PARTS LIST, ASSY, LC, TL360, DA, 5000lb
ROTARY LUG

SIZE A | PL1624 | REV B

SHEET 1 OF 1

FORM FEG035_PL_ASIZE, REV. B

@ Copyright 1986-2024 by Vektek LLC**** ********** ****See Vektek.com>Products>Maintenance