APPLY LUBRICANT TO ALL SEALS PRIOR TO INSTALLATION.
DO NOT USE SILICONE TYPE LUBRICANTS.

WARNING

DO NOT OVER TORQUE ADAPTER 30871123.
TORQUE IS NOT TO EXCEED 60 IN-LBS

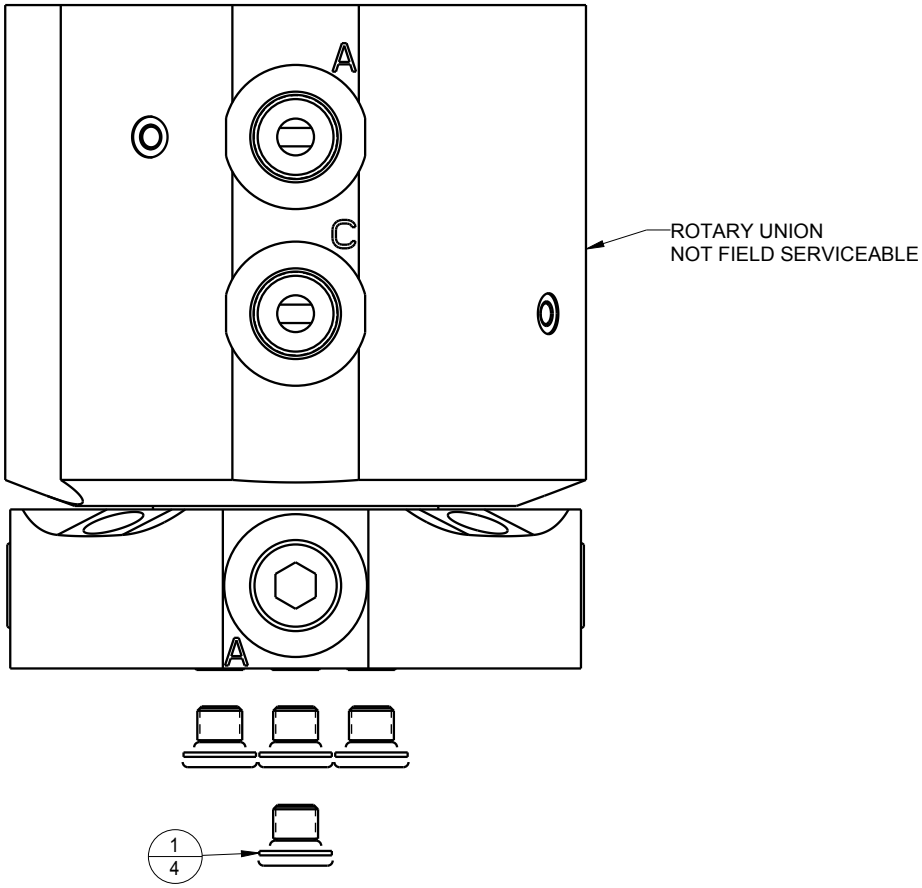

No.	QTY	PART No.	DESCRIPTION
1	4	30871123	ASSY, ADAPTER, RU, MM, SAE 2

PARTS LIST

VEKTEK®
VEKTEK, INC.
1334 E. SIXTH AVE. P.O. BOX 625
EMPORIA, KS. 66801 U.S.A.

REV	IN ACCORDANCE WITH ECN	EFFECTIVE DATE	REVISED BY	DATE
A	3383	RELEASE	JDW	12/14/17

ASSEMBLIES AFFECTED
32-4264-01

PARTS LIST, ASSY, RU, QP, SAE 6, BRZ

DRW BY: JDW
DATE: 12/14/17

DRAWING STATUS: Released
PRODUCTION APPROVED FOR RELEASED STATUS ONLY

SIZE A | PL3209 | REV A

SHEET 1 OF 1

FORM FEG035_PL_ASIZE, REV. B

© Copyright 1986 - 2018 by Vektek, Inc.