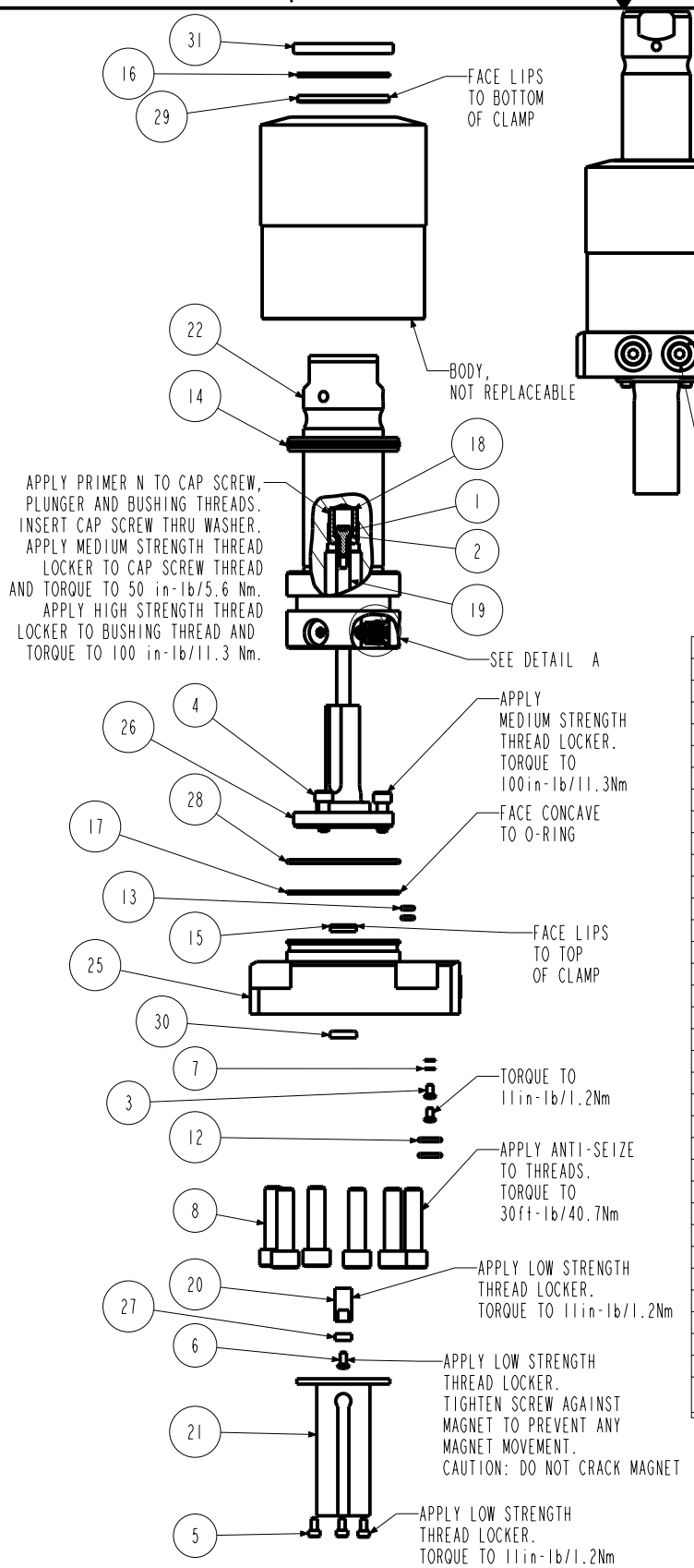

No.	QTY	PART No.	DESCRIPTION	Std. Seal Kit	FKM Seal Kit
N/A	N/A	IS1505	INSTRUCTION SHEET, ARM INSTALLATION		
N/A	N/A	6V711050	SEAL KIT, FKM		
N/A	N/A	607I1050	SEAL KIT, STANDARD		
31	1	39V11051	WIPER,PRESS-IN, (1-1/2)	X	X
30	1	39V10029	WIPER,PRESS-IN, (1/4)	X	X
29	1	39H52000	SEAL, U-CUP, 1-1/2 x 1/8 x 1-3/4	X	39V52000
28	1	39H51002	O-RING, (-033)	X	39V51002
27	1	91100001	MAGNET, .130 x .312, PS		
26	1	81592133	CAM,SC,LP,7500/33KN,STR,TC,PR		
25	1	81542113	BASE,SC,BF,LP,7500.PR		
24	3	81532108	SEAT, BALL, SC, LP, TC		
23	3	81532107	RETAINER, SC, LP, TC		
22	1	81512121	PLUNGER,SC,LP,7500&33KN,DA,TC,PR		
21	1	81500061	HOUSING,PS,MAG,SC,LP		
20	1	81500060	ADAPTOR,PS,MAG,SC,LP		
19	1	81500053	ROD,ACTUATOR,SC,LP,BF,7500/33KN		
18	1	81500039	BUSHING,PLUNGER,PR,SC,LP		
17	1	39054017	BU RING,(-033)	X	39054023
16	1	39054016	BU RING,(1.5x.125x.063)	X	X
15	1	39052043	SEAL, LL, (1/4 X 1/8 X 1/8 X 1/2)	X	39V52043
14	1	39052030	SEAL,CROWN,1-3/4x2-1/8x1/4	X	39V52030
13	2	39051041	O-RING, (-006)	X	39V51041
12	2	39050042	O-RING, (-011)	X	39051025
11	2	30601144	PLUG, SOCH, SAE 4		
10	3	23650004	BALL,TUNGSTEN-CARBIDE.250		
9	3	23350066	SPRING, COMPRESSION		
8	10	21500305	SHCS, M8 X 1,25-6G X 30MM		
7	2	21500200	WASHER		
6	1	21500044	SCREW, CAP, BTNH, M3-0.5 X 6,SSTL		
5	3	21500043	SHCS, M3-0.5 x 6 ALY		
4	3	21500031	SHCS, M5 x 0,8 x 14, ALY		
3	2	21500019	SCREW, CAP, BTNH, M3 X 6, ALY		
2	1	21430022	WASHER		
1	1	21410049	SCREW, CAP, SOCH, 8-32 X 3/8, ALY		

PARTS LIST

VEKTEK®

VEKTEK, INC.
1334 E. SIXTH AVE. P.O. BOX 625
EMPORIA, KS. 66801 U.S.A.

REV				
A	2679	RELEASE	JDW	06/23/14
REV	IN ACCORDANCE WITH ECN	EFFECTIVE DATE	REVISED BY	DATE

DRW BY: JDW
DATE: 10/16/13

DRAWING STATUS: Released
PRODUCTION APPROVED FOR RELEASED STATUS ONLY

ASSEMBLIES AFFECTED
14222102PS
14122102FPS

PARTS LIST, ASST,SC,LP,TC,BF,7500,DA,STR,PS

SIZE A | PL7221 | REV A

SHEET 1 OF 1

FORM FEG035_PL_ASIZE, REV. B

@ Copyright 1986-2024 by Vektek LLC ****See Vektek.com>Products>Maintenance for special tools

READ ALL INSTRUCTIONS BEFORE INSTALLING ARMS
FAILURE TO FOLLOW INSTALLATION INSTRUCTIONS WILL VOID PRODUCT WARRANTY !

–Installing or Positioning of Low Profile Swing Clamp Arms–

NOTE: If the arm is already installed on the plunger, loosen the cap screw.

CAUTION: Never attempt to rotate the arm before loosening the cap screw. This can damage the plunger rotating mechanism.

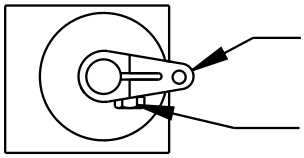

1. Rotate the arm to the desired radial position.
2. Tighten to the torque specification listed below.

MODEL	TORQUE ft-lb	TORQUE N-m
5000lb & 22Kn	115 ft-lb	156 N-m
7500lb & 33Kn	225 ft-lb	305 N-m

IT IS RECOMMEND THE CROSS BOLT BE REPLACED IF THE ARM NEEDS REMOVED AFTER IT HAS BEEN IN SERVICE.			
CROSS BOLT 5000 & 22KN SHORT LONG DOUBLE	CROSS BOLT 5000 & 22KN UPREACH	CROSS BOLT 7500 & 33KN SHORT LONG DOUBLE	CROSS BOLT 7500 & 33KN UPREACH
21-5000-24	21-5000-25	21-5000-28	21-5000-25

Instruction Sheet

VEKTEK®

VEKTEK, INC.
1334 E. SIXTH AVE. P.O. BOX 625
EMPORIA, KS. 66801 U.S.A.

REV	IN ACCORDANCE WITH ECN	EFFECTIVE DATE	REVISED BY	DATE
C	2799	RELEASE	JDW	01/29/15

DRW BY: MES
DATE: 08/01/05
DRAWING STATUS: **Released**
PRODUCTION APPROVED FOR RELEASED STATUS ONLY

Arm Installation Instruction Sheet
Low Profile Swing Clamps
SIZE A | IS1505 | REV C

SHEET 1 OF 1

FORM FEG041_IS_ASIZE, REV. B

@ Copyright 1986-2024 by Vektek LLC ****See Vektek.com>Products>Maintenance for special tools